GVPQL22X4203SF

22"W X 42"H QUARTER ROUND TOP LEFT SURFACE MOUNT PVC GABLE VENT: FUNCTIONAL, W/ 2"W X 2"P BRICKMOULD SILL FRAME

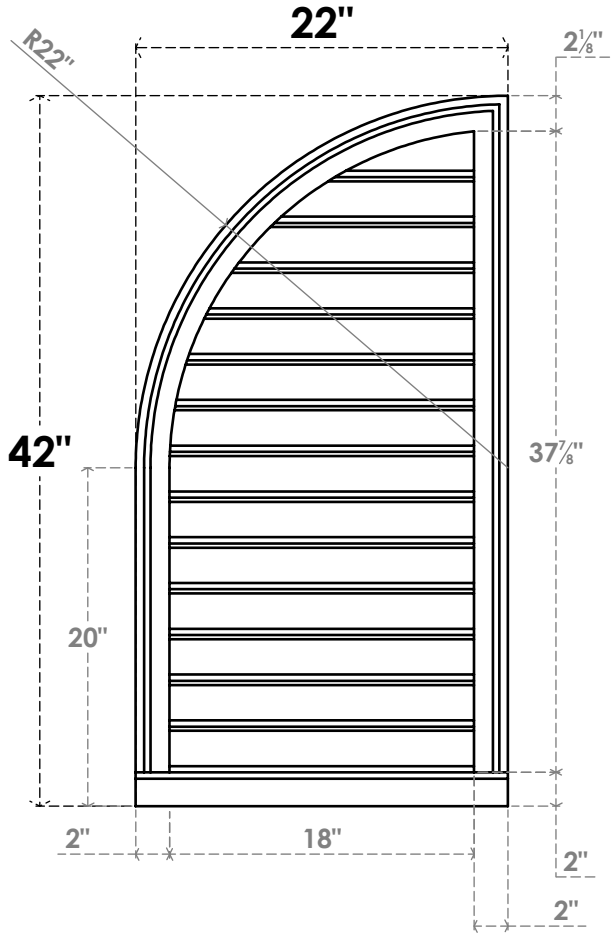

FRONT

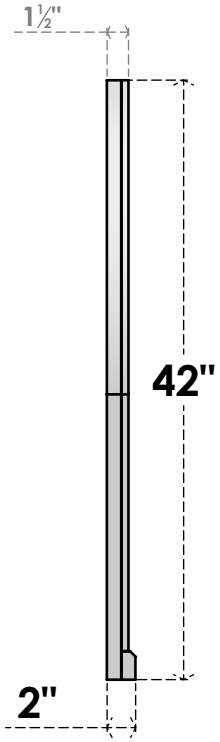

SIDE

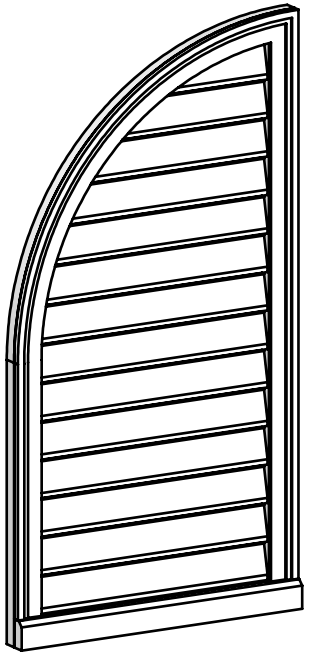

VENTING AREA: 58.44 SQ IN
LOUVER HEIGHT: 2 3/4"
LOUVER QTY: 14

NOTES
1. INSTALLATION TO BE COMPLETED IN ACCORDANCE WITH MANUFACTURER'S SPECIFICATIONS.
2. DRAWING MAY NOT BE TO SCALE
3. THIS DRAWING IS INTENDED FOR DESIGN AND PLANNING PURPOSES ONLY.
4. ALL INFORMATION CONTAINED HEREIN WAS CURRENT AT THE TIME OF DEVELOPMENT BUT MUST BE REVIEWED AND APPROVED BY THE PRODUCT MANUFACTURER TO BE CONSIDERED ACCURATE.
5. ARCHITECTURAL GRADE PVC PRODUCTS ARE MADE FROM EXPANDED CELLULAR PVC AND COME NATURALLY WHITE BUT MAY BE PAINTED

EKENA MILLWORK
2300 WEST MAIN ST.
CLARKSVILLE, TX 75426
TOLL FREE: 866-607-0453
WWW.EKENAMILLWORK.COM

Generated Date : 09/05/2022